Steve Langley
630-310-4041
SLangley@PiggingSolutions.com

Recover Product - Save Money
Protect The Environment
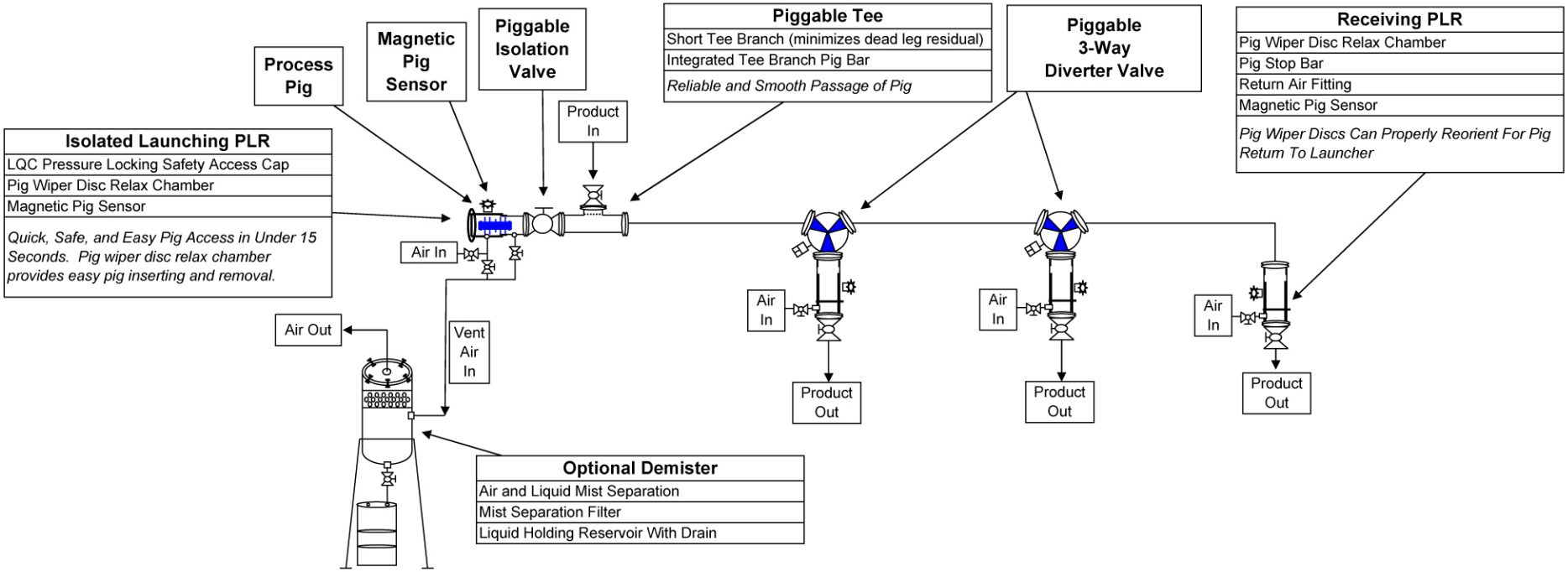
Web Site Concept Sketch
1-Pig, 2-Way, Multiple Drops
With 3-Way Piggable Valves